CM-CMB / CM-CMW

Avonic Ceiling Mount Black/White for CM40 & CM60 series

AVONIC
focus on av

Ceiling mount plate for Avonic CM40 & CM60 series cameras. Mounting plates are available in black and white.

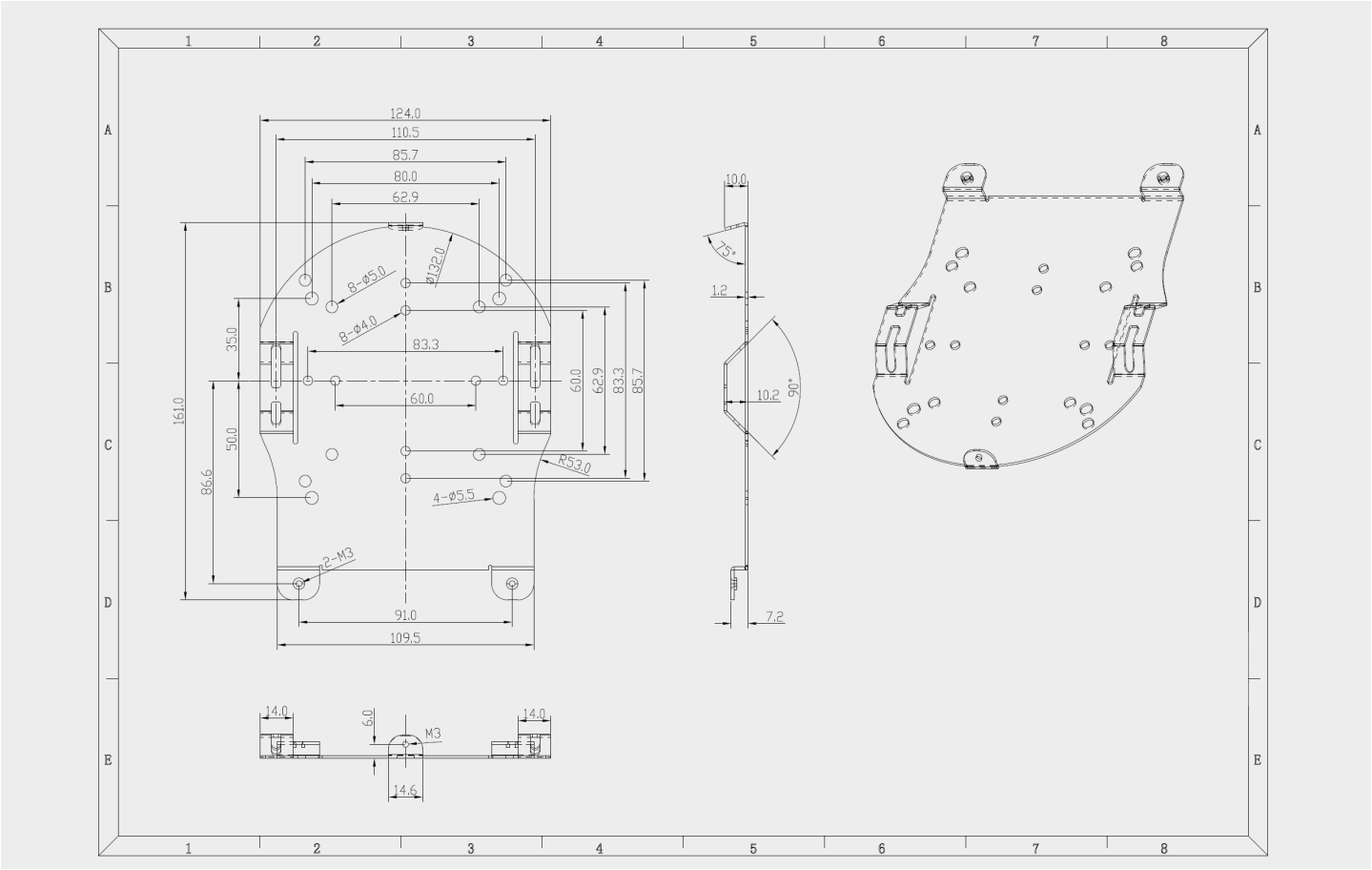

General specifications

Color	Black, White
Dimensions product	20 x 15 x 2 cm
Weight product	0.450 kg
Dimensions box	20 x 15 x 2 cm
Weight box	0.450 kg
Included	CM-CMB or CM-CMW

Versions

Black	CM-CMB
White	CM-CMW

Distributor / Vertrieb:

VIDELCO Europe Limited – Professionelle Audio- Video- Medien-Technik
Fon: +49 (0)2102 / 86 39-00 • Fax: +49 (0)2102 / 86 39-17 • info@videlco.eu • www.videlco.eu

VIDELCO
Europe Limited